the Fresh & Furious™

Instruction Book - BBL620 /W

Breville®

BREVILLE RECOMMENDS SAFETY FIRST

At Breville we are very safety conscious. We design and manufacture consumer products with the safety of you, our valued customer, foremost in mind. In addition we ask that you exercise a degree of care when using any electrical appliance and adhere to the following precautions.

IMPORTANT SAFEGUARDS

READ ALL INSTRUCTIONS BEFORE USE AND SAVE FOR FUTURE REFERENCE

- Remove and discard all packaging materials and stickers before first use.
- To avoid choking hazard for young children, remove and safely dispose the protective cover fitted on the power plug.
- This appliance is for household use only. Do not use it in moving vehicles or boats, do not use it outdoors, and do not use it for anything other than its intended use. Misuse can cause injury.
- Keep the appliance and its cord out of reach of children.
- This appliance shall not be used by children.
- Appliances can be used by persons with reduced physical, sensory or mental capabilities or lack of experience and knowledge if they have been given supervision or instruction concerning use of the appliance in a safe way and if they understand the hazards involved. Cleaning and user maintenance shall not be made by children without supervision.
- Children shall not play with the appliance.
- Do not use the appliance near the edge of a countertop or table. Ensure the surface is level, clean and free of water and other substances. Please be aware that vibration during use may cause the appliance to move.

- Do not use the appliance on (or close to) a hot gas or electric burner, or where it could touch a heated oven or surface.
- Do not allow the cord to hang over the edge of a countertop, or to become knotted.
- To avoid electric shock, do not immerse the cord, plug or motor base in water (or other liquids).
- Installation of a residual current device (a standard safety switch on your wall socket) is recommended to provide additional safety protection when using appliances. It is advisable that a safety switch (with a rated residual operating current not more than 30mA) be installed in the electrical circuit supplying the appliance. Contact your electrician for further professional advice.
- In order to avoid the possible hazard of the blender starting by itself due to inadvertent resetting of the overload protector on the motor, do not attach an external switching device (such as a timer) or connect the blender to a circuit that can regularly switch the blender on and off.
- Do not operate appliance with a damaged cord or plug, or after appliance malfunctions, or if dropped or damaged in any way. Stop use immediately and contact Breville by phone or email for replacement or repair.
- Do not use blender while OVERLOAD PROTECTION is flashing on the LCD.
  If your blender stops operating and the "OVERLOAD PROTECTION" is flashing, unplug the blender and wait for 30 minutes until the motor has cooled off. Once cooled, you will be able to use the blender as usual again.

- All maintenance (other than cleaning) is to be done by an authorised Breville Service Centre.
- Authorised Breville Service Centres can be found on our website **www.Breville.com.au** Alternatively, you can contact the Breville Customer Care Centre by phone on **1300 273 845** or email **AskUs@breville.com.au**

SAFEGUARDS FOR YOUR BLENDER

- Wash the blender jug with warm soapy water before first use.
- Use only the blender jug and lid that is supplied with this blender. The use of attachments or accessories not manufactured or specified by Breville may cause the risk of fire, electrical shock, or injury.
- Always ensure the blender is assembled properly before using. Lid must be firmly secured to the jug before operation to ensure internal contents do not escape, spray or overflow.
- Under heavy load the blender should not be operated for more than 1 minute. Heavy load for this blender was defined defined as per the appliance safety standard specified load (6 ice cubes (120g), 3 frozen bananas halves (250g) , 180g frozen raspberries, 500ml milk, 3 scoops vanilla ice cream (140g). Any load equivalent to this or heavier should not be operated for more than 1 minute.
- Do not leave the blender unattended when in use.
- Keep hands, fingers, hair and clothing away from the blender during use. Always turn blender off and unplug at the wall before reaching inside. Avoid touching moving parts.
- Be careful when handling the blender jug as the blades are very sharp. Be careful when emptying the jug and during cleaning. Mishandling of the blades may cause injury.
- Do not remove the jug from the motor base while blender is in use.
- The blender is intended for food or drinks preparation. Do not use for anything other than food or drinks. Do not operate without any ingredients in the blender jug.
- Never attempt to operate with damaged blades, or with utensils, or any foreign objects inside the blender jug.
- To reduce the risk of severe injury to persons or damage to the blender, keep hands and utensils out of the jug while blending.

- Never blend hot liquids. Allow ingredients and liquids to drop to room temperature before putting into the jug for blending.
- Do not put the blender jug in extremes of heat or cold, for example placing a cold jug into hot water, or vice versa.
- Before moving the blender, cleaning or putting it away for storage, always turn blender off and unplug at the wall.
- Always disconnect the appliance from the supply if it is left unattended and before assembling, disassembling or cleaning.

IMPORTANT SAFEGUARDS FOR ALL ELECTRICAL APPLIANCES

- Fully unwind the cord before use.
- To protect against electric shock, do not immerse the cord, plug or motor base in water or any other liquid.
- Do not allow the cord to hang over the edge of a table or bench, touch hot surfaces or become knotted.
- Appliances can be used by persons with reduced physical, sensory or mental capabilities or lack of experience and knowledge if they have been given supervision or instruction concerning use of the appliance in a safe way and if they understand the hazards involved.
- This appliance shall not be used by children. Keep the appliance and its cord out of reach of children.
- Cleaning and user maintenance shall not be made by children without supervision.
- Always disconnect the appliance from the supply if it is left unattended and before assembling, disassembling or cleaning.
- Children should be supervised to ensure that they do not play with the appliance.
- It is recommended to regularly inspect the appliance. Do not use the appliance if the power supply cord, plug or appliance becomes damaged in any way. Return the entire appliance to the nearest authorised Breville Service Centre for examination and/or repair.

- Any maintenance other than cleaning should be performed at an authorised Breville Service Centre.
- This appliance is for household use only. Do not use in moving vehicles or boats. Do not use outdoors. Do not use this appliance for anything other than its intended use. Misuse may cause injury.
- The installation of a residual current device (safety switch) is recommended to provide additional safety protection when using electrical appliances. It is advisable that a safety switch with a rated residual operating current not exceeding 30mA be installed in the electrical circuit supplying the appliance. See your electrician for professional advice.

BREVILLE ASSIST™ PLUG

Your Breville appliance comes with a unique Breville Assist™ Plug, conveniently designed with a finger hole to easy removal from the wall outlet.

FOR HOUSEHOLD USE ONLY
SAVE THESE INSTRUCTIONS

Components

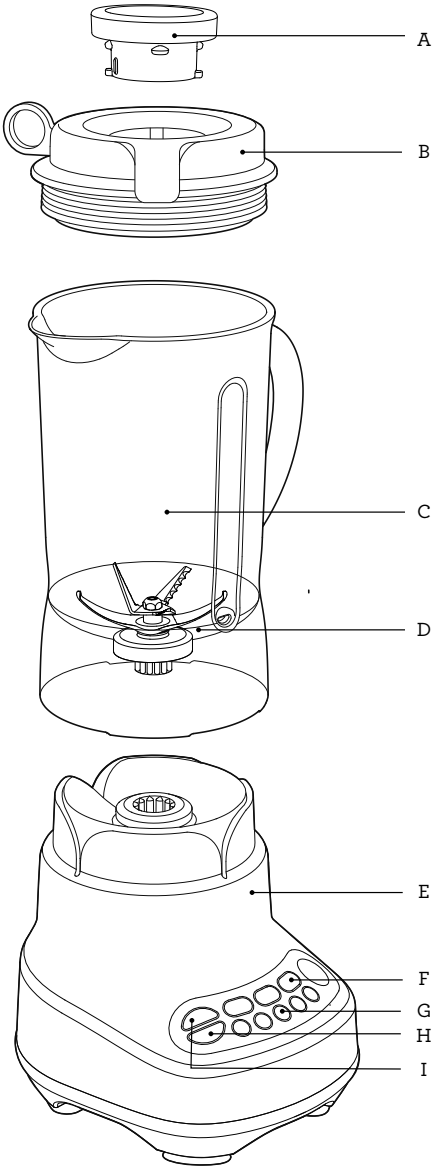

A. Inner measuring cup
Remove to add ingredients while blending.

B. Breville Assist™ lid
Ring pull lid for easy removal.

C. 1.5 litre BPA-free Eastman Tritan™ jug
Impact resistant, shatter proof, and dishwasher safe.

D. Kinetix® blade and bowl system
Contoured to the base of the jug so there are no food traps. Central blades are serrated for extra cutting performance, and the outer blades create the Kinetix motion.

E. Blender Base
For long lasting, professional performance.

F. SMOOTHIES and AUTO PULSE/ICE CRUSH programs
Optimises the blender's capabilities to create great smoothies and drinks.

G. 5 electronic speeds
Maximises control for different ingredients, from slow mix to high speed liquify.

H. Auto Clean program
Removes most of the ingredients from jug walls and blade.

I. On / Off button - powers the unit into READY mode.

NOTE

Compatible with the Vac Q™ (BBL002) – sold separately.

Functions

BEFORE FIRST USE

Before using your Breville Blender for the first time, remove any packaging material and promotional labels.
Wash the lid, inner lid, blender jug (refer to "Care & Cleaning) in warm, soapy water with a soft cloth. Rinse and dry thoroughly. Do not place parts in the dishwasher (with the exception of the blender jug).

The blender jug may be washed in the dishwasher. Ensure the lid has been removed from the blender jug before placing into the dishwasher. The motor base can be wiped with a damp cloth. Dry thoroughly.

ASSEMBLING AND ATTACHING THE BLENDER

Step 1

Place the motor base on a flat, dry surface such as a counter-top. Ensure that the motor base is turned off at the ON | OFF button and the power cord is unplugged.

Step 2

With the blender jug in the upright position place it on the motor base. The handle of the blender can be positioned to the left or right hand side of the appliance.

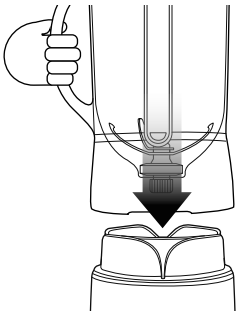

Step 3

Add food or liquid into the blender jug ensuring not to exceed the 'MAX' mark.
Place the blender lid firmly into position on the top of the blender jug. Insert the clear inner measuring lid into the blender lid and turn clockwise to lock into position.

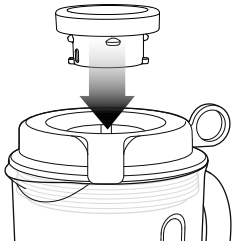

Your Breville Blender features a Breville Assist™ Lid. This allows the lid to fit tightly onto the blender jug, avoiding displacement during operation. The ring pull design allows the user to easily remove the lid with a simple leverage action.

Step 4

Plug power cord into a 240V power outlet and turn on.

Step 5

Press the ON | OFF button on the far left of the control panel to turn the blender on.
The ON | OFF button will illuminate and flash. The LCD timer screen will illuminate with '00' displayed.

- Flashing light indicates ready to operate. Avoid any contact with moveable parts while in operation.
- Do not fill the blender jug above the 'MAX' line. When the blender jug is filled at or near the 'MAX' line place one hand on the blender lid to avoid displacement of the lid during operation.

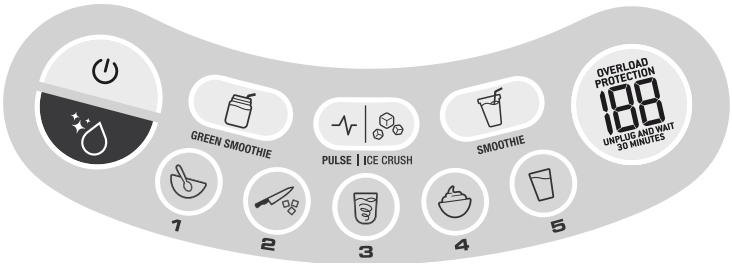

MANUAL SPEED SELECTION

ON | OFF

The ON | OFF button powers the unit into READY mode.

ELECTRONIC SPEED CONTROL

There are 5 electronic speed buttons from MIX through to LIQUIFY.

MIX combines more delicate foods with a folding motion, and is good for combining wet and dry ingredients.

LIQUIFY is the fastest setting, and is ideal for breaking down ingredients to make cocktails and other finely blended mixtures.

Select the required speed (1 to 5) by pressing the corresponding speed button. The blender will start to operate and the selected speed button will illuminate. The ON | OFF button will illuminate and cease to flash.

The LCD timer screen will start counting up in one second increments until 120 seconds is reached.

NOTE

Operate the blender only for the appropriate amount of time required – do not over blend.

When 120 seconds is reached, the blender will automatically stop blending and the selected speed button illumination will go out.
The ON | OFF button will illuminate and flash. After a few seconds the LCD timer screen will revert to '00'.

- The Breville Blender will automatically stop blending after 120 seconds. This is a safety feature and restricts wear on the motor.
- The speed can be changed at any time during the blending process. Each time a new speed is selected its button will illuminate and the previous speed button illumination will go out. The number of seconds on the LCD timer screen will continue to count upwards to 120 seconds unless interrupted.

Count-up timer

The blender timer counts up in seconds as it blends on one of the 5 electronic speeds from MIX to LIQUIFY. When using the timer this way, the blender will stop after 2 minutes.

PRESET PROGRAMS

Your Breville Blender features three additional functions, 'AUTO PULSE/ICE CRUSH', 'GREEN SMOOTHIE' and 'SMOOTHIE'. These three pre-programmed cycles automatically adjust the blending time and speeds to optimise blending results. The maximum amount of ice cubes the blender can blend at any one time is 1 standard ice tray or 250g. Select the required function by pressing the corresponding function button. The blender will start to operate and the selected function button will illuminate. The ON | OFF button will illuminate and stop flashing. The LCD timer screen will start counting down in one second increments until '00' is displayed.

GREEN SMOOTHIE (60 SECONDS)

Optimised to break down whole hard ingredients like fruits, leafy greens and seeds, and allows them to blend together with other soft and liquid ingredients.

SMOOTHIE (60 SECONDS)

This program has been optimised to combine and aerate frozen and liquid ingredients together. The SMOOTHIE function has a unique processing technique that blends the denser ingredients at lower speed, then increases in speed as ingredients thicken. This will happen several times while blending smoothies. The programming also circulates the ingredients for maximum aeration and creamy texture.

AUTO PULSE/ ICE CRUSH (60 seconds)

Optimised to crush ice, and also ideal for processing other foods that need sudden bursts of power. It also encourages ingredients to move around the jug by manually controlling pulse cycles.

Count-down timer

The blender timer counts down in seconds as it blends in the pre-set programs.

AUTO CLEAN

Use to remove most of the ingredients off the blender walls and blades. Add 2 cups warm soapy water, and press the clean button.

For harder to clean, sticky or thick ingredients, add ½ teaspoon of dish liquid detergent for extra cleaning power. For best results, clean the blender jug this way immediately after use.

NOTE

Pressing a button will activate the program – press again to deactivate.

NOTE

If the blender is running and a different button is pressed, the speed will automatically switch to that program without stopping.

WARNING

Never place anything other than food and liquids in the blender while the motor is running.

NOTE

Use the AUTO PULSE/ICE CRUSH button when the food that is being processed is too thick or coarse to circulate within the blender jug.

At the end of use, always ensure the blender is turned off by pressing the ON | OFF button on the control panel. Then unplug the cord. Ensure the motor and blades have completely stopped before attempting to move the appliance, or when the Breville Blender is not in use and before disassembling, cleaning and storing.

Hints & Tips

- If the volume (while blending) is below the maximum line, the inner measuring cap can be removed and oils/liquids can be added while blender is in use.
- Run the blender only for the appropriate amount of time required – do not over blend ingredients.
- Use the AUTO PULSE/ICE CRUSH button when food is too thick or coarse to circulate within the blender jug.
- Do not exceed the maximum mark when adding foods and liquids into the blender.
- Ingredients may stick to the sides of the blender jug. To push food back onto the blades, turn the blender off and unplug at the wall. Use a plastic spatula to scrape down the sides of the jug, and continue blending.
- If any moisture or liquid appears on top of the motor base during blending, turn the blender off and unplug at the wall. Remove the blender jug, and wipe motor base immediately with a dry cloth or paper towel.
- When the blender has been running for 120 seconds, it will automatically turn off. This is a safety feature to protect the motor.
- A speed can be selected at any time, even while the blender is running.
  Press the new speed, and the blender will change operation immediately. The motor will still automatically turn off at 120 seconds total time running time.
- The maximum amount of ice cubes that the blender can process is 250g (approx. 1 standard ice tray).

Do's

- ✓ Use a combination of the blending speeds and AUTO PULSE/ICE CRUSH function to suit the foods being processed.
- ✓ Use the SMOOTHIE function to blend fruits, ice cream and yogurts into thick smoothies, whips and milkshakes.
- ✓ Use the AUTO PULSE/ICE CRUSH function for foods that only require short bursts of power, such as chopping nuts and crushing ice.
- ✓ When blending drinks with ice cubes or frozen fruit, use the AUTO PULSE/ ICE CRUSH function.
- ✓ Thicker mixtures puree more efficiently if the jug is ¼ to ½ full.

Don’ts

- ✘ Do not use metal utensils, as they may damage the blades or blender jug.
- ✘ Do not blend a heavy mixture for more than 10 seconds. For normal blending tasks, do not blend longer than 1 minute at a time. If you need to blend longer, turn off the blender and stir ingredients before starting again. This rest will help protect the motor from wear and tear.
- ✘ The blender will not knead dough, or mash potatoes.
- ✘ When blending warm ingredients, do not put more than 2 cups at a time in. Once blending has started, you can add another cup slowly by removing the inner lid and pouring through the hole.
- ✘ Do not blend hot or boiling ingredients. Allow food to cool down to a warm state before placing in the blender. This is to safeguard against sudden bursts of steam that are caused by blending hot ingredients, and it also protects the jug from possible damage.

Blending Chart

FOOD	PREPARATION & USAGE	QUANTITY	FUNCTIONS	TIME
Raw vegetables	Peel and cut into 1.5–2cm cubes.	200g	CHOP | Speed 2	10–30 sec
Nuts	Remove shells.	200g	CHOP | Speed 2	10–30 sec
Bread or biscuit crumbs	Cut into 2cm pieces, break up biscuits.	100g	CHOP | Speed 2	10–30 sec
Mayonnaise	Mix the egg yolk and vinegar, then add oil slowly through the lid	125g	MIX | Speed 1	60 sec
Whipped cream	Add sugar or vanilla if desired.	300ml	MIX | Speed 1 and AUTO PULSE/ ICE CRUSH	10–20 sec 10–20 sec
Herbs and spices	Roughly chopped	1 cup	CHOP | Speed 2	20–30 sec
Smoothie	4 ice cubes (70g), 2 frozen bananas halves (150g) , 120g frozen raspberries, 300ml milk, 2 scoops vanilla ice cream (85g)	Max 1100ml	SMOOTHIE	60 sec
Fresh fruit	Chopped or whole berries	250g	BLEND | Speed 3	20–30 sec
Ice	Crush	Max 1 tray/ 250g	AUTO PULSE/ ICE CRUSH	60 sec

NOTE: This blending chart should be used as a guide only.

Troubleshooting

PROBLEM	EASY SOLUTION
Motor doesn't start or blade doesn't rotate	• Check the blender jug and lid are securely in place. • Check the ON | OFF button and selected function button is illuminated. • Check that the power plug is properly inserted into the power outlet.
Food is unevenly chopped	• This can happen when too much food is being blended at one time. Try a smaller amount, and work in batches if necessary. • The ingredients may be too large. Try cutting into smaller pieces. For best results, ingredients should be in pieces no larger than 2cm.
Food is chopped too fine or is watery	• Try blending for shorter period of time. Use the AUTO PULSE/ ICE CRUSH function for better control.
Food sticks to blade and jug	• The mixture may be too thick. Try adding more liquid and/or using a slower speed for blending.
Blender overloaded (all lights flashing)	• This blender has overload protection to prevent damage to the motor. OVERLOAD PROTECTION will flash on the LCD. Unplug and allow the blender to cool down for 30 minutes. Once cooled, you will be able to use the blender as usual again. • We recommend blending in smaller batches, or cutting ingredients into smaller batches.

Care & Cleaning

Jug and lid

In order to keep your Jug clean and avoid food drying on the blades and jug, follow the below steps as soon as possible after use

- Rinse most of the ingredients off the jug and lid.
- Add 500ml of warm water and press the AUTO CLEAN button. If thick or sticky ingredients require extra cleaning power add a few drops of dish liquid detergent.
- Rinse the jug and lid again and/or wash separately in warm soapy water with a soft cloth or bottle brush.
- It is most effective to clean the jug immediately after use.

WARNING

Oils in citrus rind can damage the material of your jug if being exposed to it for a longer period. Always clean your blender jug immediately after processing citrus rind.

Motor base

To clean the motor base, wipe with a soft, damp cloth then dry thoroughly. Wipe any excess food particles from the power cord.

Cleaning agents

Do not use abrasive scouring pads or cleaners on either the motor base or the jug, as they may scratch the surface. Use only warm soapy water with a soft cloth.

Dishwasher

The blender jug and lid can be washed in the dishwasher on a standard wash cycle. The jug can be placed on the bottom shelf, however the lid and inner measuring cap should be washed on the top shelf only. Be aware that washing parts on a regular base in the dishwasher can shorten the life of them due to prolonged exposure to harsh detergents, hot water and pressure.

Stubborn food stains and odours

Strong smelling foods such as garlic, fish and some vegetables such as carrots may leave an odour or stain on the blender jug and lid. To remove, soak blender jug and lid for 5 minutes in warm soapy water. Then wash with a mild detergent and warm water, rinse well and dry thoroughly. Store jug with the lid off.

Storage

Store your blender upright with the blender jug assembled on the motor base, or beside it. Do not place anything on top. To allow air to circulate, keep the lid off.

Note

Breville Customer Service Centre

Australian Customers

Phone: 1300 139 798

Web: **www.breville.com**

New Zealand Customers

Phone: 0800 273 845

Web: **www.breville.com**

Breville®

Master Every Moment™

Breville, the Breville logo, Master Every Moment, and Fast Slow GO are trademarks of Breville Pty. Ltd. A.B.N. 98 000 092 928.

Copyright Breville Pty. Ltd. 2022.

Due to continued product improvement, the products illustrated/photographed in this brochure may vary slightly from the actual product.

BBL620 /W ANZ – F22